Power System Protection

Dr. Lionel R. Orama Exclusa, PE

Week 1

Philosophy of Protective Relaying

Readings-Mason Chapter 1

- Relay function
- What exactly is a relay?
- CT's and PT's
- Abnormal conditions-faults
- Desirable relay characteristics
- Zones of protection
  - Primary and backup protection

Relay function

- Causes fast disconnection of equipment from power system during abnormal conditions
  - Minimizes damage
  - Minimizes effects on the system operation
  - Maximizes power transfer

Relay function

- Power transfer (from C.R. Mason page 13)

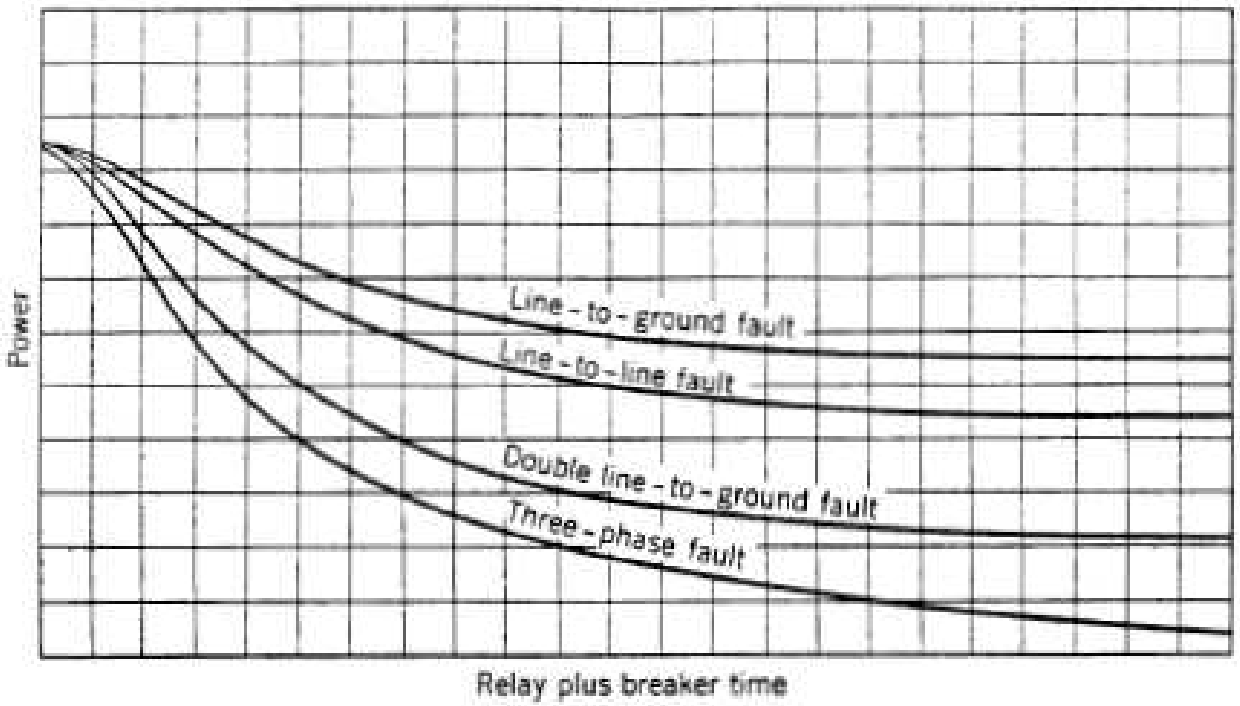

Fig. 4. Curves illustrating the relation between relay-plus-breaker time and the maximum amount of power that can be transmitted over one particular system without loss of synchronism when various faults occur.

What exactly is a relay?

- Measuring device-receives a signal from the Power System (PS) & determines if the condition is abnormal
- Control device-for abnormal conditions, it signals Circuit Breakers (CB) to disconnect equipment
  - It kind of “relays” a signal from the PS to the CB
  - Relay & CB is a system protection team
  - Fuses are simpler system

What exactly is a relay?

What exactly is a CB?

What exactly is a relay?

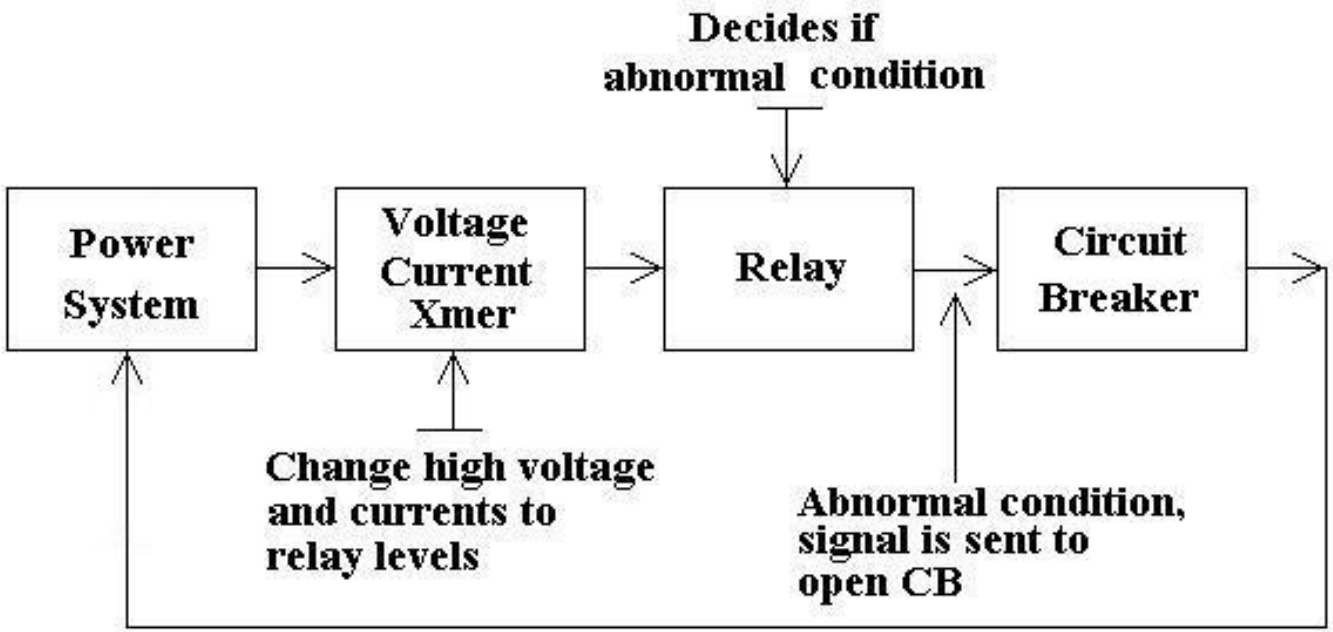

Current Transformers (CT's)

- Device that produces current proportional to current in the power system conductor
- Ideal CT has current of:

$$I_{CT} = \frac{I_{SYS}}{N_{CT}}$$

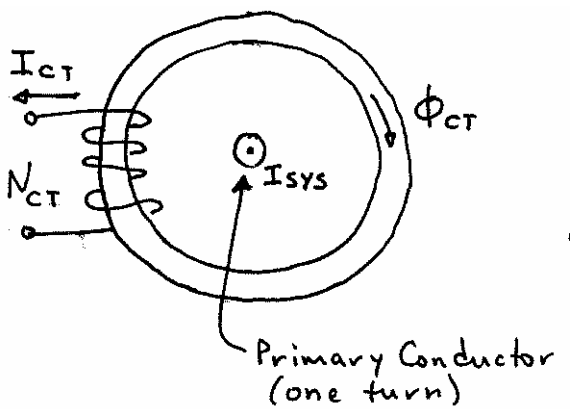

- Rated I_{CT} is aprox. 5A, typically (called CT secondary current)

Current Transformers (CT's)

Common ratios

Current	Turns
50:5	10
100:5	20
200:5	40
400:5	80
600:5	120
1000:5	200
20005	400

Polarity dot convention

Potential Transformers (PT's)

- Device that produces voltage proportional to voltage in the power system bus

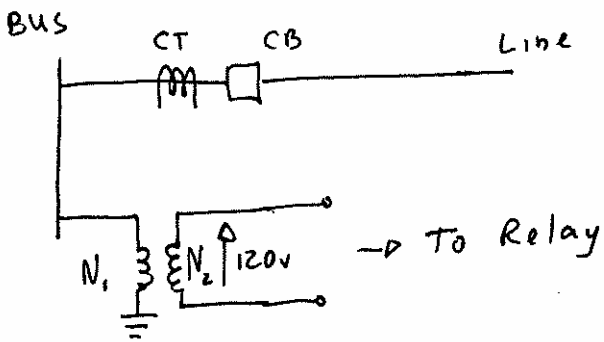

- Ideal PT has voltage of:

$$V_{PT} = V_{SYS} \frac{N_2}{N_1}$$

- Rated V_{PT} is aprox. 120V, typically (called PT secondary voltage)

Relaying Diagram

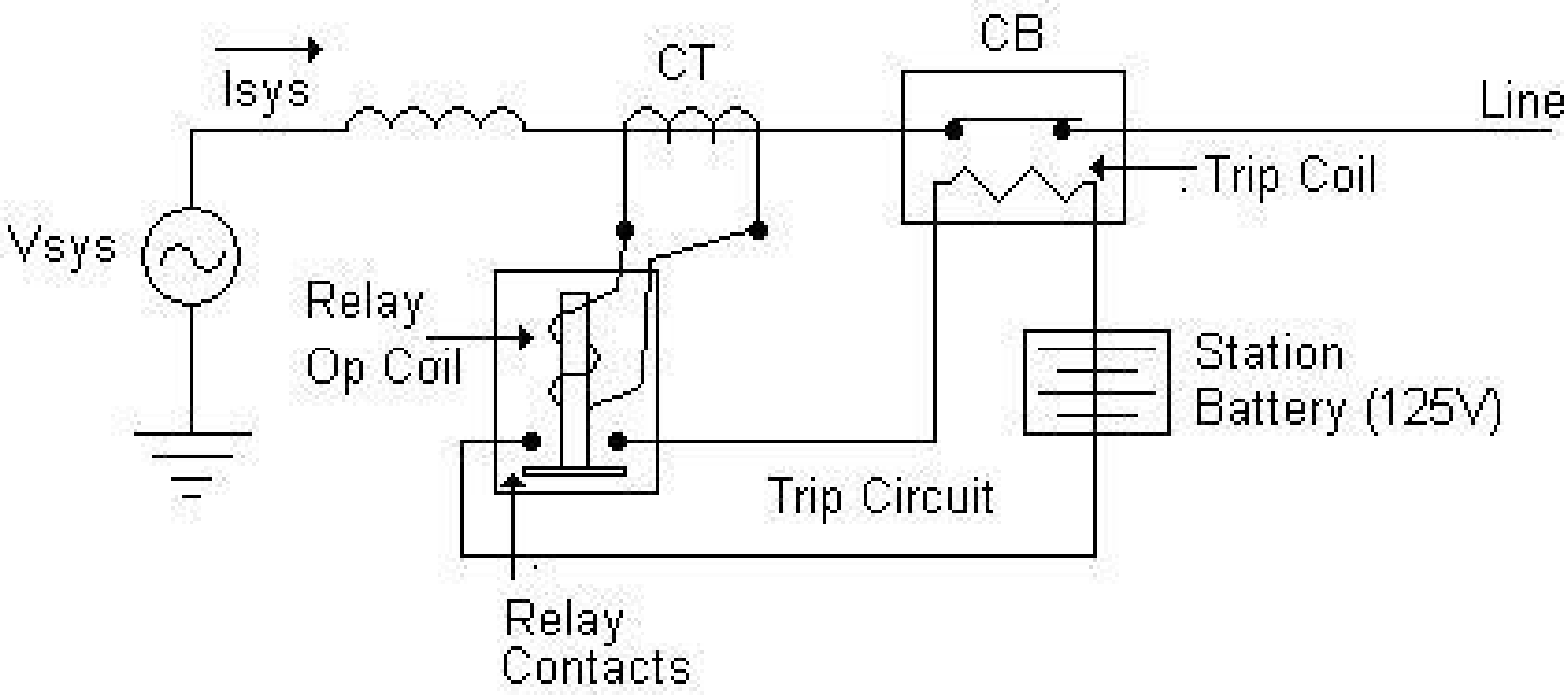

Simple Contacts Diagram

- Short hand notation for the trip circuit
- Control Relaying & Instrumentation Diagram (CR&I)

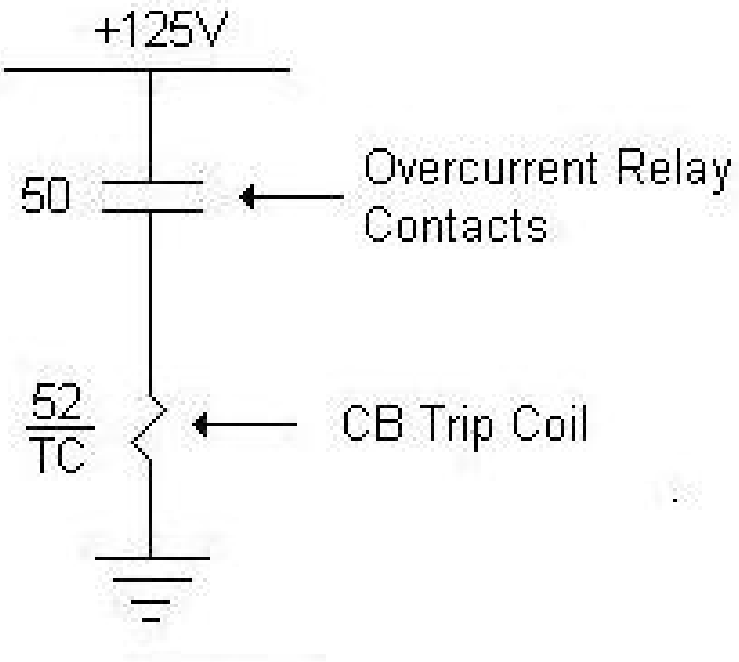

Relay Contacts

- “a” Contact
  - Open when relay that controls it is not picked up, or when CB that controls it is open
  - Closed when relay that controls it is picked up, or when CB that controls it is closed
- “b” Contact
  - Closed when relay that controls it is not picked up, or when CB that controls it is open
  - Open when relay that controls it is picked up, or when CB that controls it closed

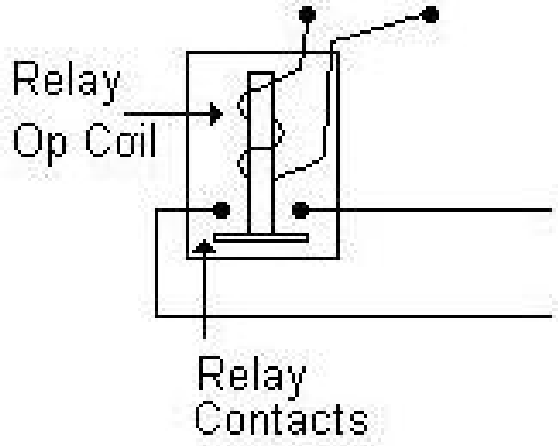

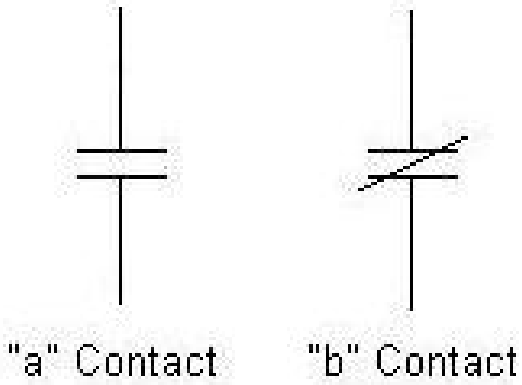

Contacts

- A relay is said to be picked up when its:
  - Its “a” contacts are <u>closed</u>

  or
  - Its “b” contacts are <u>open</u>

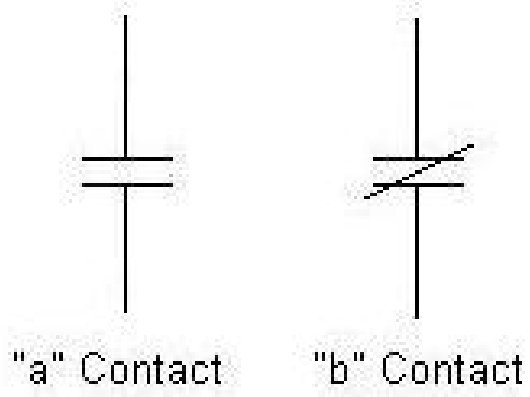

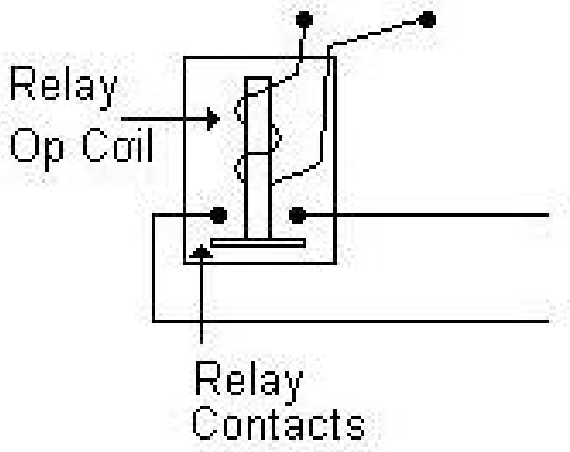

Faults (Short Circuits)

- Most common type of abnormal condition
- Often Abnormally high currents flow $I_F >> I_L$
- Flow of current in a path not intended for it
- To interrupt I_F, circuit must be opened
- Relays often set based on calculated I_F

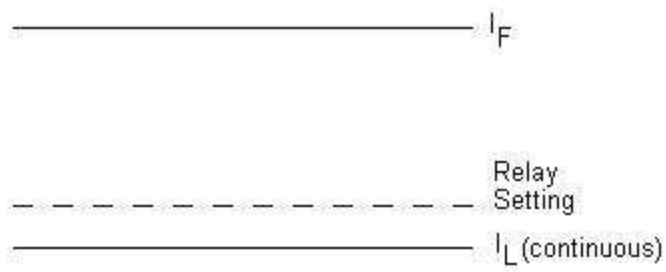

Faults (Short Circuits)

- Cause high current
  - mechanical stress
- Cause high temperature arcs
  - destroy equipment, cause fires
- Alter system voltage
- Cause system unbalance
- Block the flow of power
- Cause generator overspeed
  - Instability, loss of synchronism

Fault Current Interruption

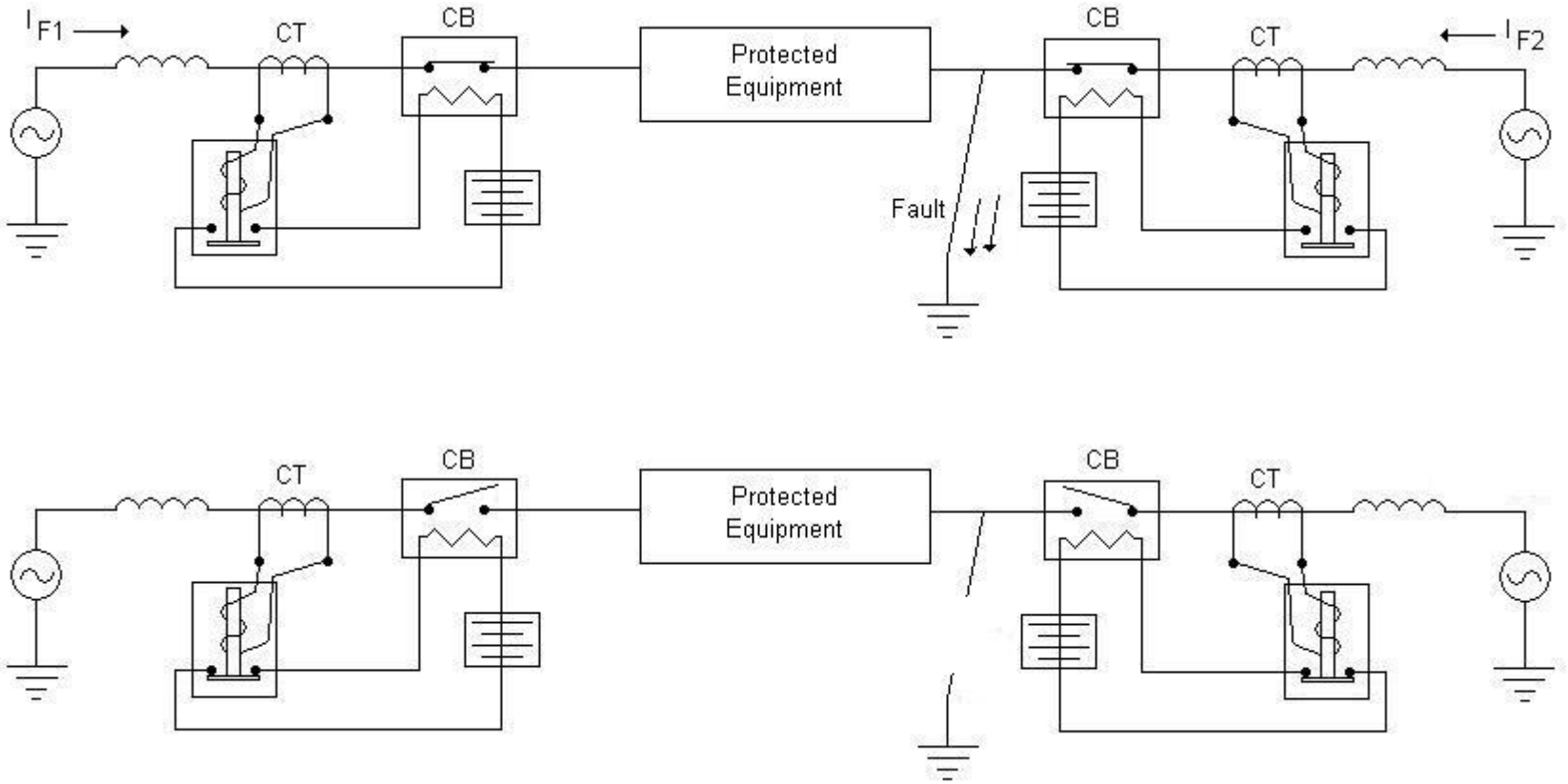

- No current flow when breakers open

Desirable Relay Characteristics

- Speed (time to make decision 1/60sec)
  - Minimizes damage from current
  - Maximizes power transfer and stability
- Security
  - Relay should not cause CB to open during normal conditions
- Dependability (reliability)
  - Relay should cause CB to open during abnormal operation

Desirable Relay Characteristics

- Sensitivity
  - Ability to detect all faults for the expected limiting system and fault conditions
- Selectivity
  - Ability to discriminate between faults internal and external to its intended zone of protection

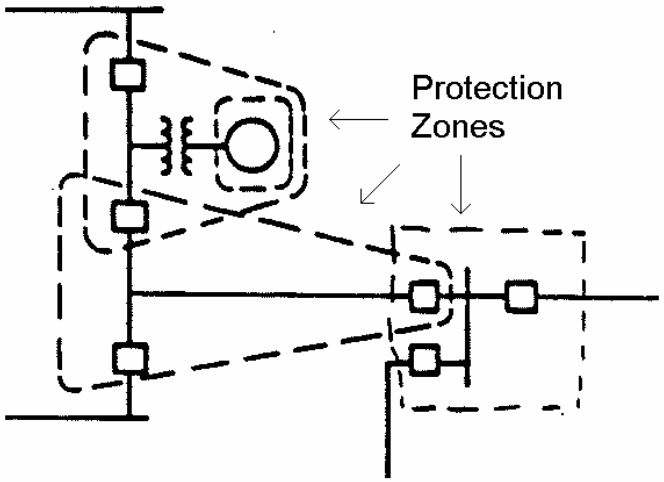

Primary & Backup Protection

- Relays, CB's, CT's & PT's located at substations
- Substation is a point of
  - Interconnection
  - Switching
  - Voltage transformation

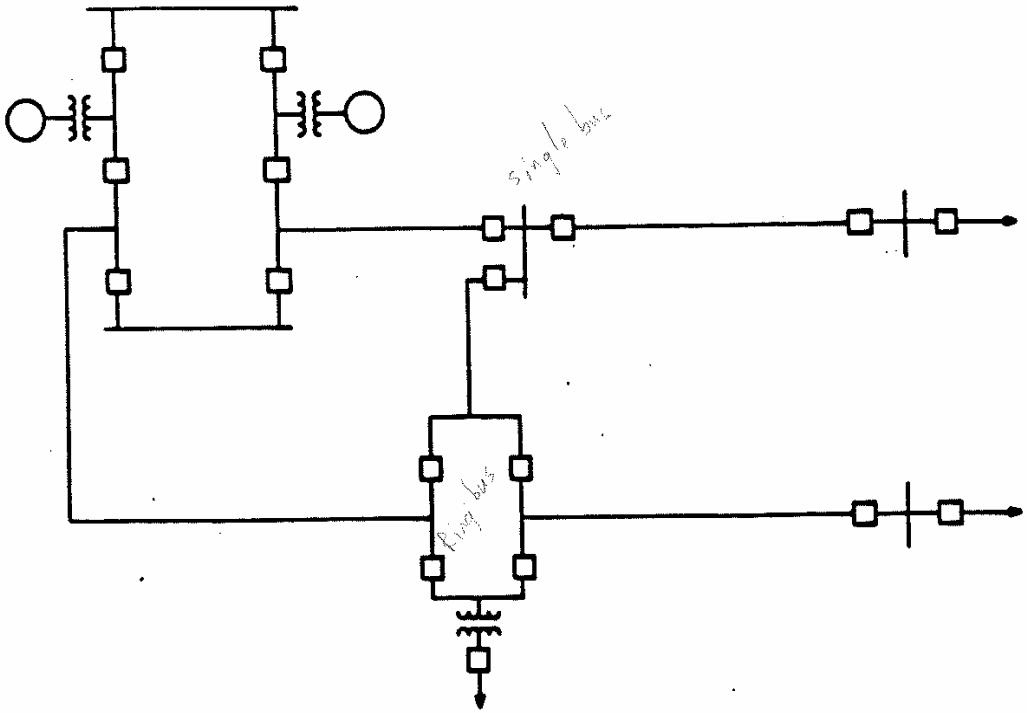

Primary & Backup Protection

- Every equipment should be protected by at least two independent protection systems
- <u>Equipment</u>
  - Lines, busses, transformers, generators
- <u>Protection</u> system
  - Primary and backup

Primary Protection

- <u>Primary</u>
  - To do it, zones are drawn on the system's one-line diagram
  - Zones are defined by CT location and include equipment & CB's that isolate equipment

Primary Protection

- <u>Primary protective zones</u>
  - CB's located in connection to each PS equipment
  - Zones configured so the fault within the zone causes all CB's in the zone to open
  - CB's open simultaneously & instantaneously (no intentional delay)
  - If primary zone is successful, minimum effect on the system (power transfer ability)

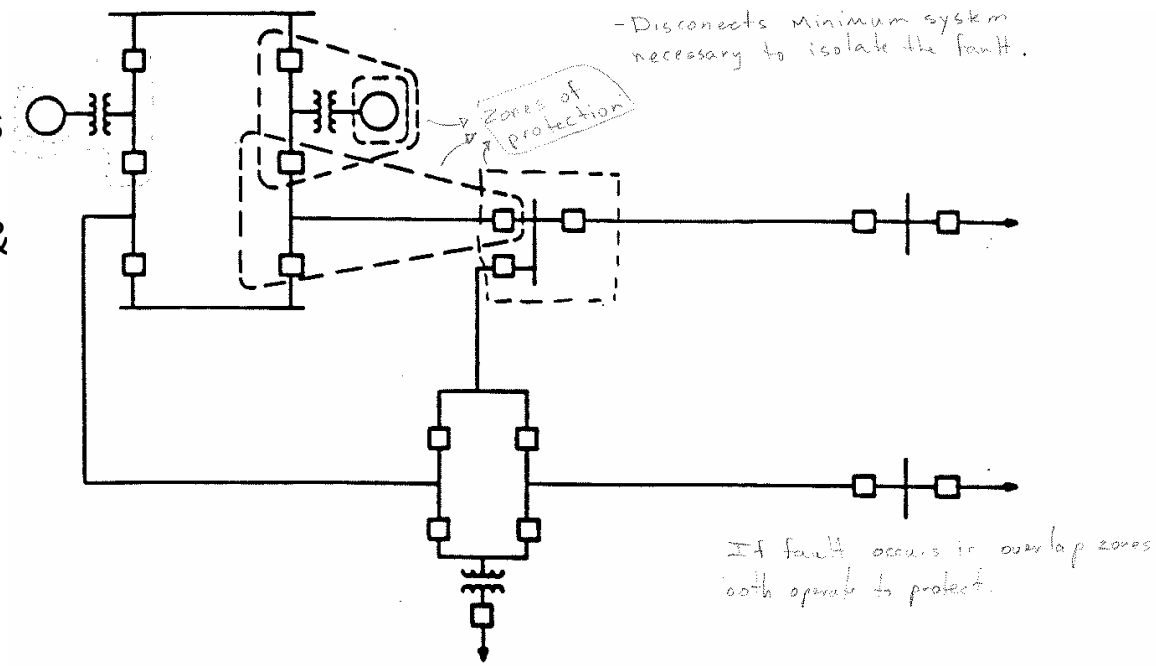

Primary Protection

- <u>Primary protective zones</u>
  - Zones defined by the CT's located in the bushings of the CB's
  - Zones overlap to avoid uncovered areas and CB failure

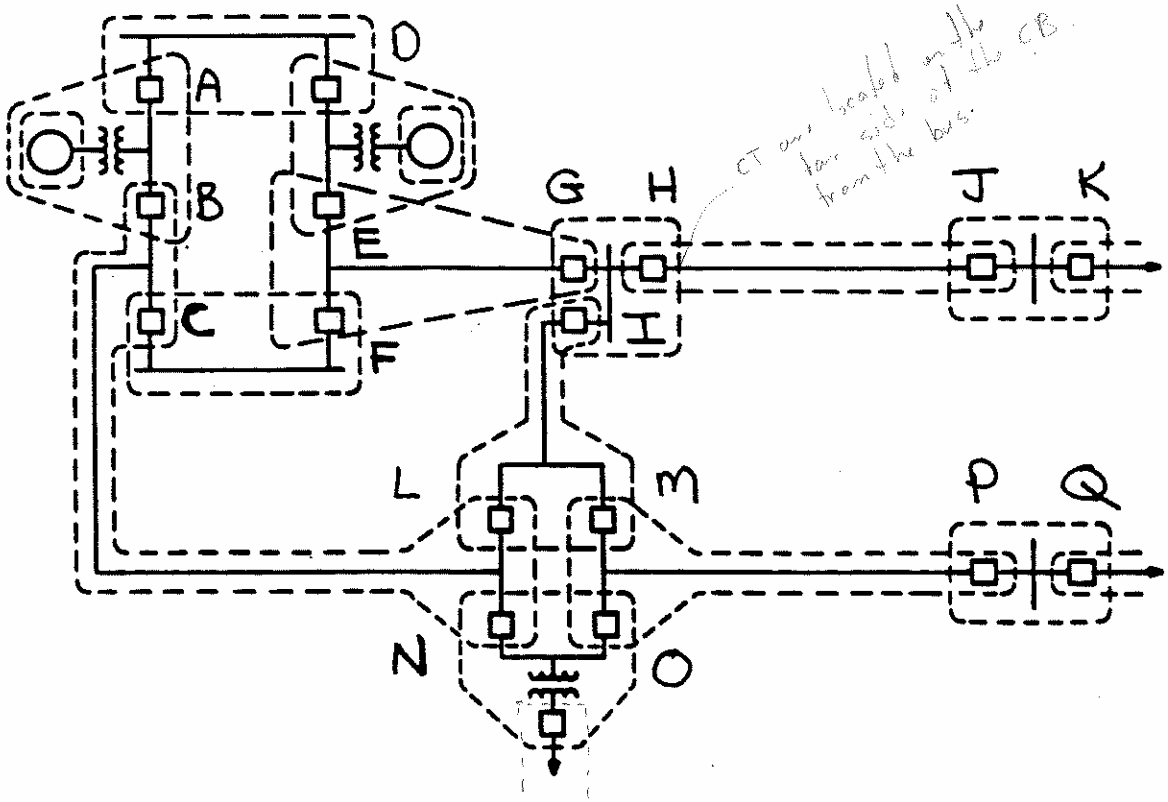

Primary & Backup Protection

Causes of Relay Failure

- CT's and circuits
- PT's and circuits
- Loss of DC supply
  - Short circuit
  - Open circuit
  - Failure of auxiliary switches
- Relay failure

Primary & Backup Protection

Causes of CB failure

- Loss of DC supply
- Open trip coil
- Short circuit trip coil
- Mechanical failure
- Failure of main contacts

Backup Protection

- Provided in case of:
  - Primary relay failure
  - Circuit breaker failure
- Ideally primary & backup must be independent
  - Relay, CB's, CT's, PT's
  - However, duplicity of CB's is not practical & causes other problems
- Backup is slower than primary
- Opens more CB's than necessary to clear a fault
- Provides primary protection when primary equipment is out of service

Backup Protection

Types of backup protection

- Remote backup
  - Clears fault one substation away from where the failure has occured
- Local backup
  - Clears fault in the same substation where the fault has occured

Remote Backup

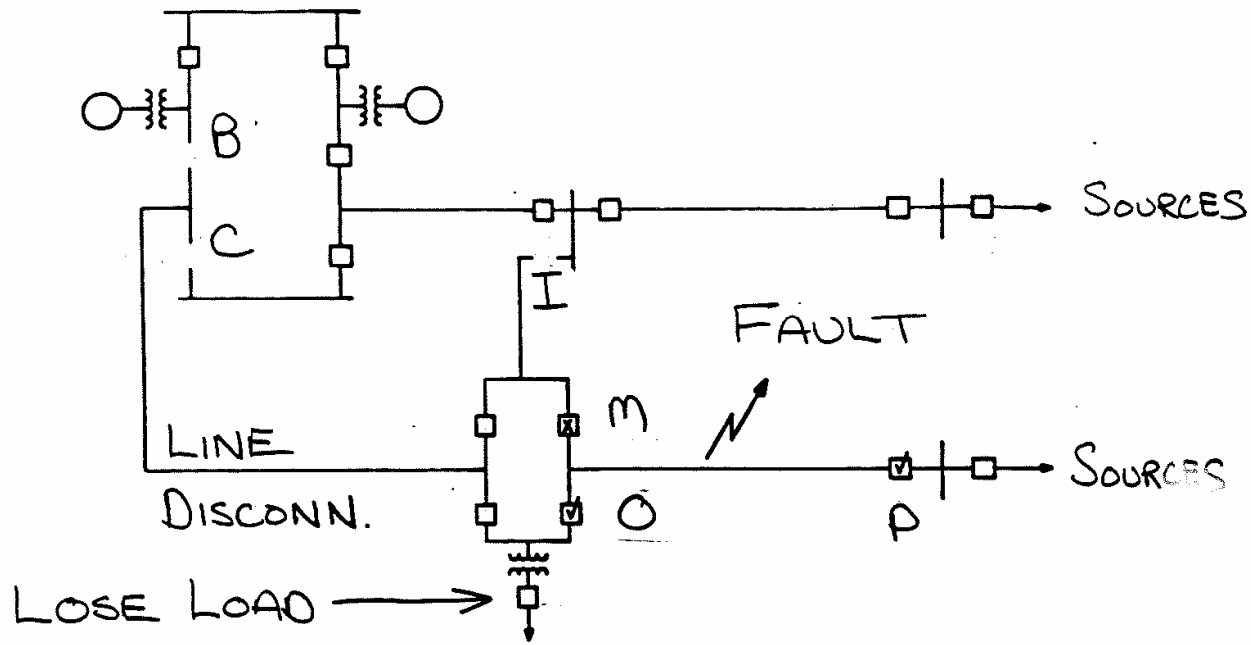

- CB's P and O opens
- CB M stay closed
- Then B, C and I has to open
- Load is lost in this case

Remote Backup

- Trips more system than necessary to clear the fault
- Long backup times from 50-60 cycles (0.8-1.0 sec)
- Difficult to set remote relays
- Initially, more economical
- In the long run is more expensive

Local Backup

- Primary relay op. & energizes timer
- If CB relays remain picked up & timer times out
  - Opens all CB's on the bus (trips all CB's)

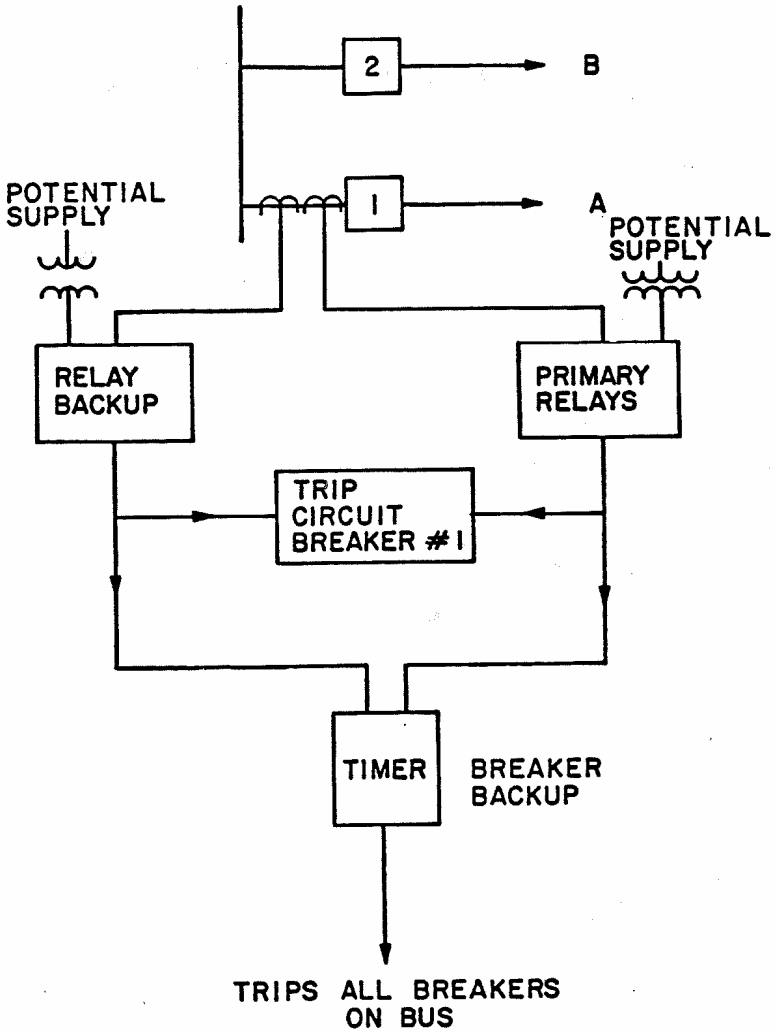

Local Backup

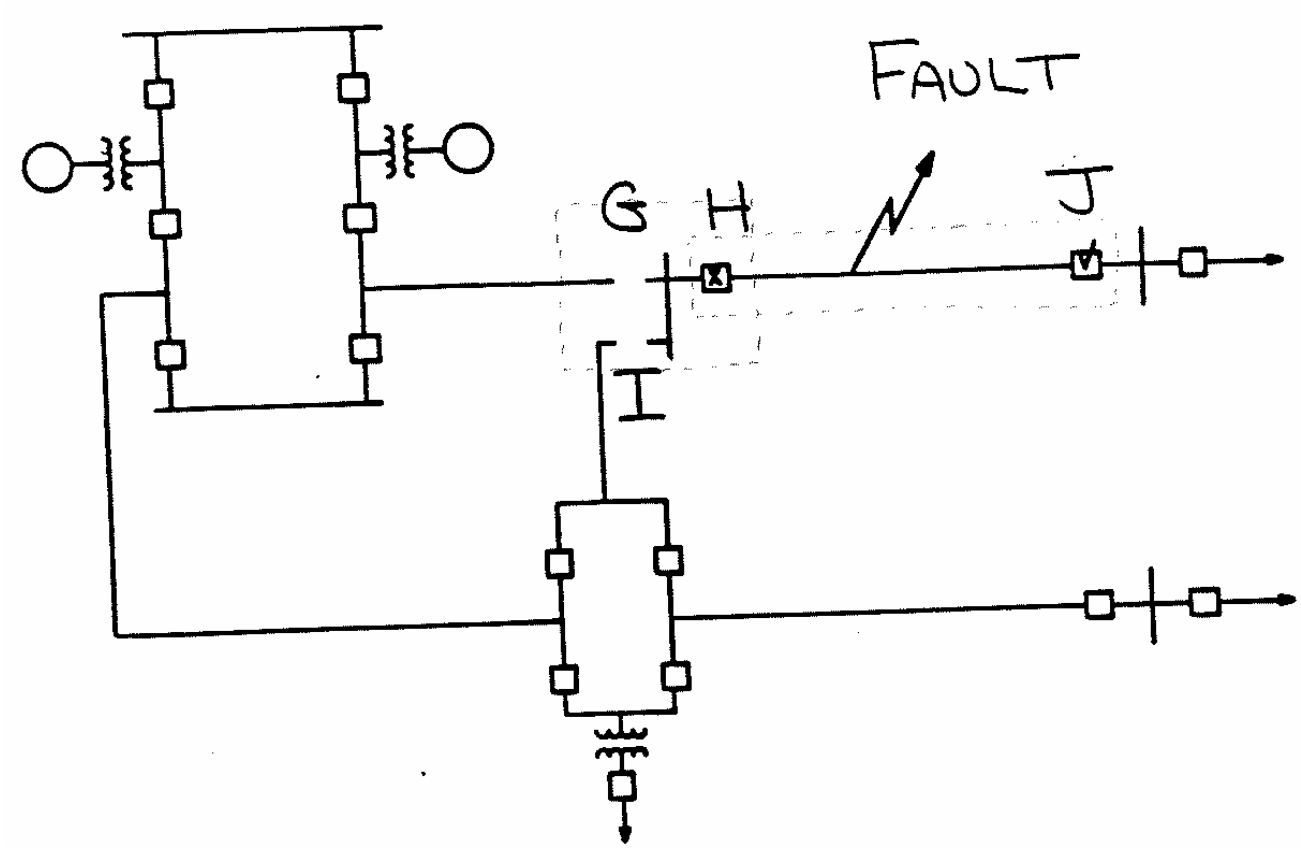

- J opens
- H closed
- G and I opens
- Load is operating

Local Backup

- P and O open
- M closed
- G and I opens
- L trips locally
- I tripped by communicated signal (Transfer Trip)
- A special kind of backup keeps Z closed

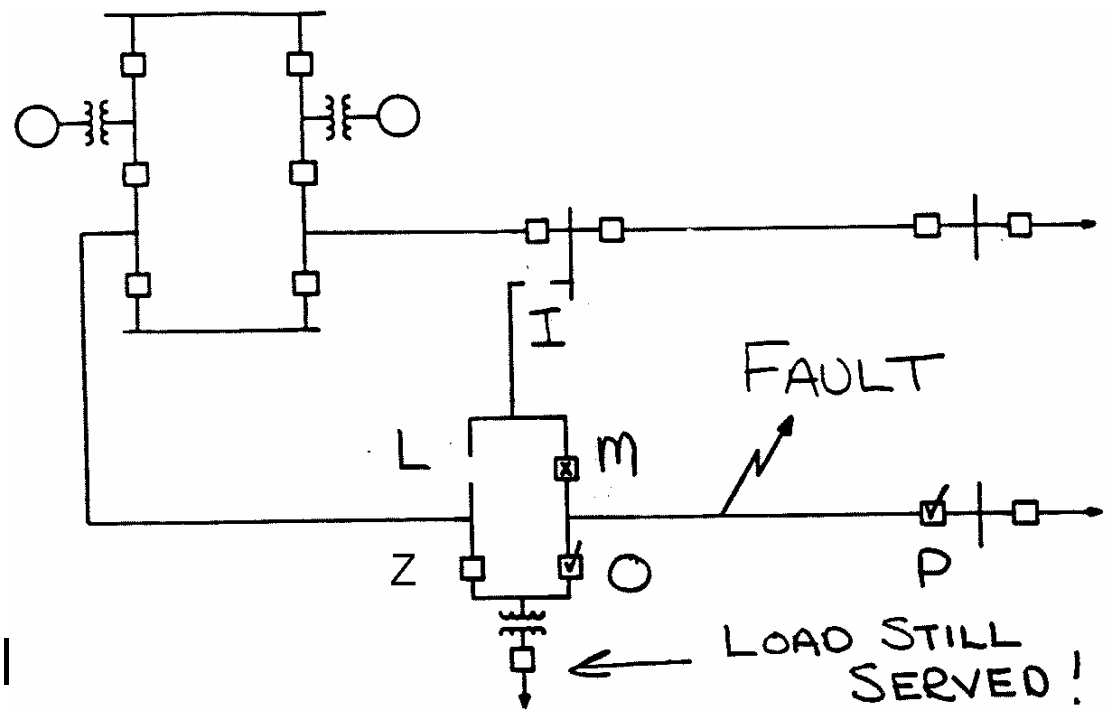

Local Backup

When a CB does not work

- Trips least amount of system in clearing a fault
- Fastest backup times are 9-20 cycles (0.15-0.33 sec)
- Simple relay settings
- Initially has a higher cost

Remote vs. Local Backup

- Remote

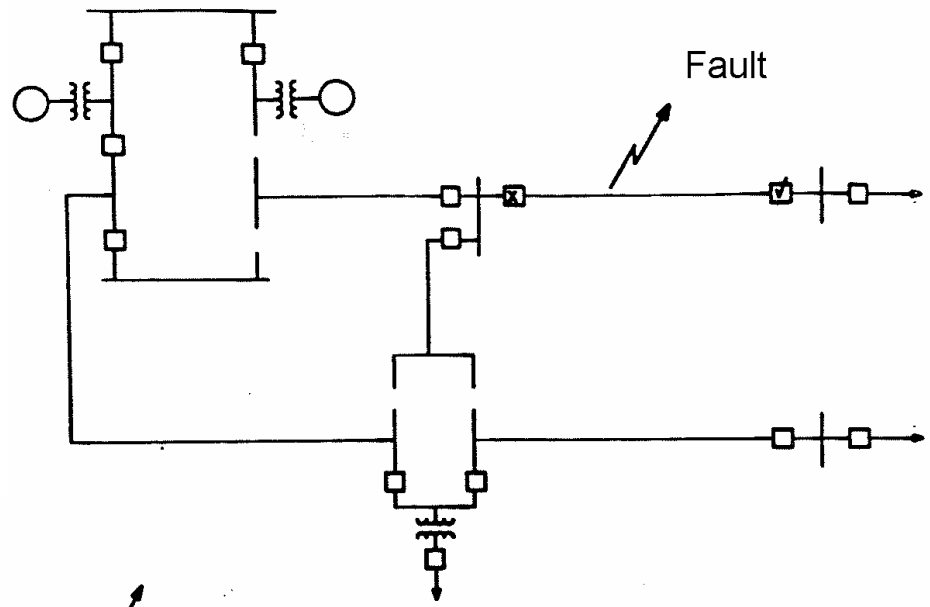

- Local

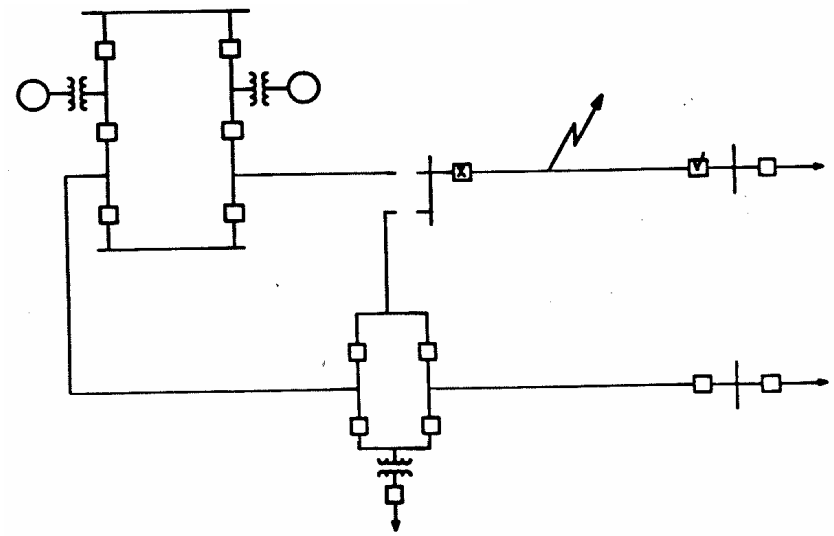

Remote vs. Local Backup

- Remote

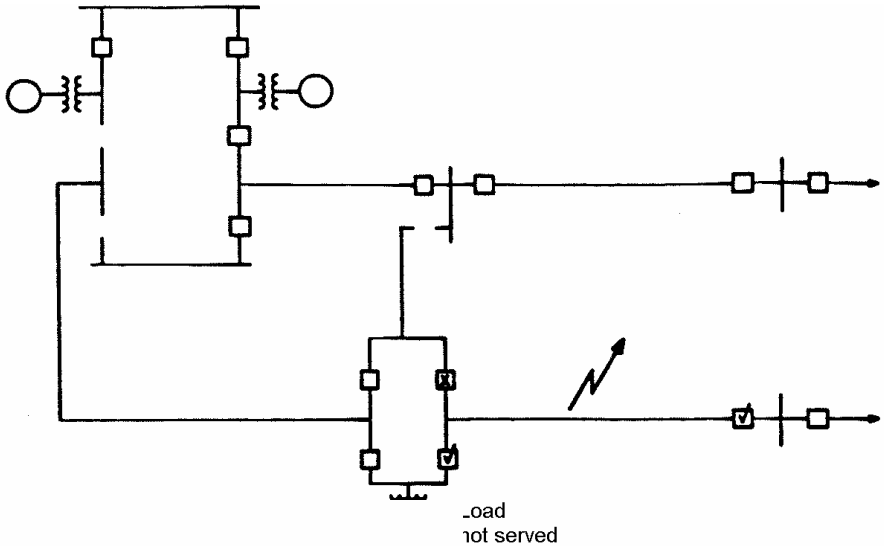

- Local