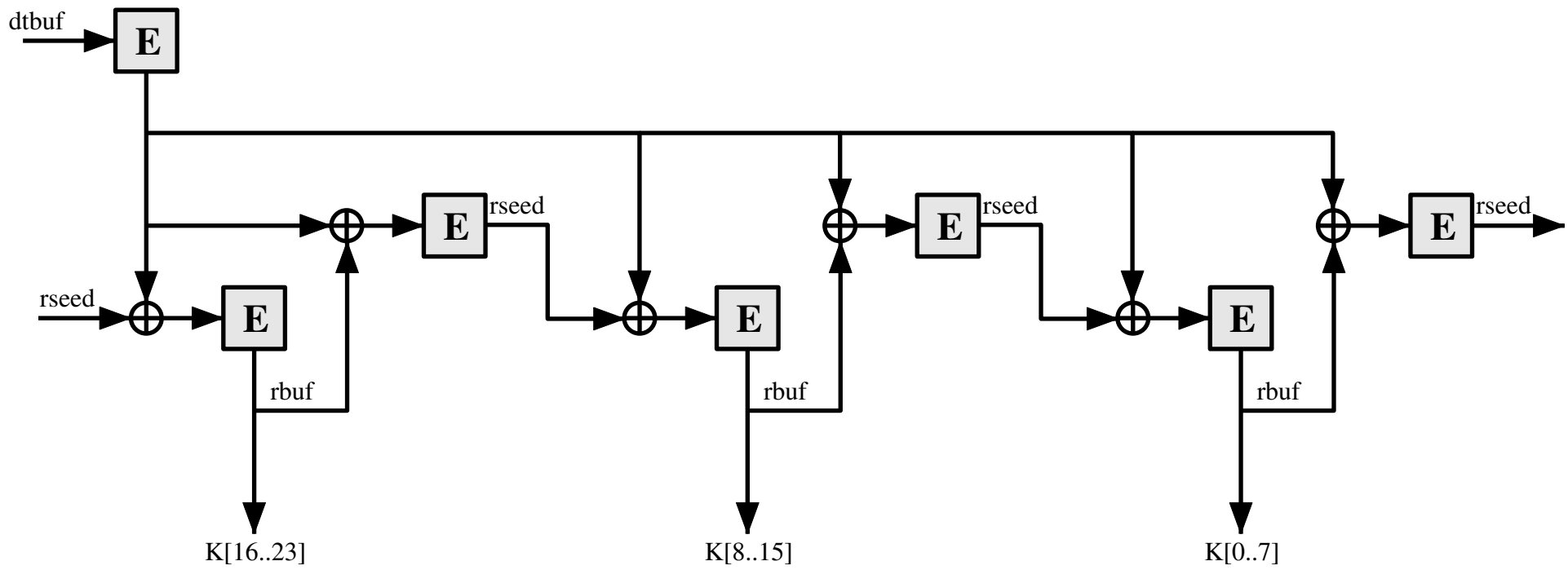

Figure 5.12 PGP Session Key and IV Generation (steps G2 through G8)